811915

Table of contents

Overrun device V PROFI 3500 clamp M14 pipe 60x8 (811915) 3

Overrun device V PROFI 3500 clamp M14 pipe 60x8 (811915)

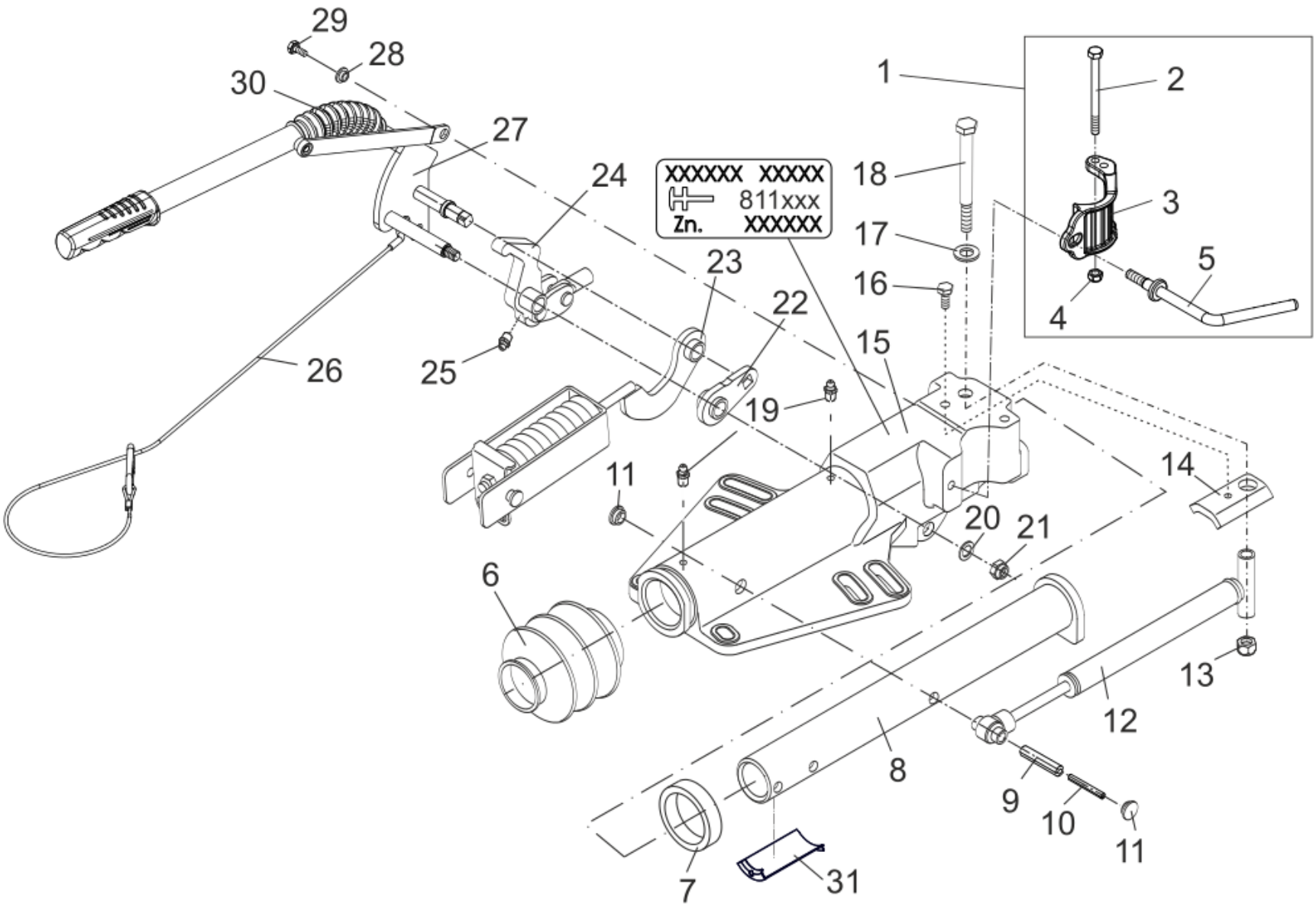

Overrun device V PROFI 3500 clamp M14 pipe 60x8 (811915)

Item no.	Article no.	Description	Quantity	Unit	Remark
1	1351203	Assembly group clamp PROFI overrun device	1	PC	
2	706004	Hexagon screw M10x125 DIN 931 8.8	1	PC	
3	694937	Clamp M14 PROFI overrun device	1	PC	
4	705519	hexnut M10 DIN 985-10	1	PC	For safety reasons: Self locking nuts and screws with chemical self locking must be used once. After untighten always use a new part.
5	694513	Clamp handle M14	1	PC	
6	21726605	Bellows	1	PC	
7	2172660003	Damping rubber	1	PC	
8	695615	Draw tube welded	1	PC	
9	706296	snap hook 14x55 DIN 1481	1	PC	
10	702369	snap hook 8x55 DIN 1481	1	PC	
11	372416	Seal plug	1	PC	
12	1207130	Shock Absorber AE 3500	1	PC	
13	706354	Hexagon screw M14x100 DIN 931 10.9	1	PC	Old material number: 02.5022.17.13
14	692278	Stop plate	1	PC	
15	ETK0005	Housing	1	PC	Only complete overrun device available, see imprint drawing number

Overrun device V PROFI 3500 clamp M14 pipe 60x8 (811915)

Item no.	Article no.	Description	Quantity	Unit	Remark
16	706090	Hexagon screw M10x20 DIN 933 at drawing	1	PC	For safety reasons: Self locking nuts and screws with chemical self locking must be used once. After untighten always use a new part.
17	705490	Washer A 15 DIN 125-ST	1	PC	
18	706353	Hexagon screw M14x140 DIN 931 8.8	1	PC	
19	2171710001	Conical grease nipple AS 8x1 DIN 71412	1	PC	
20	705397	Washer A 13 DIN 125-ST	1	PC	
21	705526	hexnut M12 DIN 985-10	1	PC	For safety reasons: Self locking nuts and screws with chemical self locking must be used once. After untighten always use a new part.
22	692687	Lever welded	1	PC	
23	692648	Spring bow cpl.	1	PC	
24	692268	Deflection lever cpl. iH=90:30 incl. grease nipple	1	PC	
24	692722	Deflection lever cpl. iH=90:27 incl. grease nipple	1	PC	
25	700203	Conical grease nipple AS 6x1 DIN 71412	1	PC	
26	209385	Breakaway cable 980 mm length Sweden	1	PC	
27	692236	Hand brake lever incl. brake away cable PROFI	1	PC	
28	692645	Bush	1	PC	

Overrun device V PROFI 3500 clamp M14 pipe 60x8 (811915)

Item no.	Article no.	Description	Quantity	Unit	Remark
29	706089	Hexagon screw M8x16 DIN 933 at drawing	1	PC	For safety reasons: Self locking nuts and screws with chemical self locking must be used once. After untighten always use a new part.
30	1225358	Spare parts set bellow hand brake lever PROFI OD	1	PC	
31	1540505	Bracket	1	PC	